Work Order ID 73039

Wednesday, August 24, 2011 2:25:05 PM

Item ID: D2332-041 **Accept** **Setup Start** **Stop**

Revision ID:

Item Name: Lid Prop Assembly 6.69" long

Start Date: 8/24/2011 **Start Qty:** 10.00 **Cust Item ID:**

Required Date: 8/31/2011 **Req'd Qty:** 10.00 **Customer:**

Reference:

Approvals: **Process Plan:** ✓ **Date:** 11-08-24 **Tooling:** _____ **Date:** _____ **Run Start** **Stop**

QC: _____ **Date:** _____ **SPC (Y/N):** _____ **Date:** _____

Sequence ID/ Work Center ID	Operation Description	Set Up/ Run Hours	Tool ID	Tool #	Plan Code	Accept Qty	Reject Qty	Reject Number	Insp. Stamp
Draw Nbr	**Revision Nbr**								
D2332	Rev C1								
100		0.00							
Small Fab	**Memo**	0.00							
Small Fab	1- Cut D2332-7 and D2332-5 to lenght as per dwg D2332. 2- Cut D2332-11 using 1/2" S.S tubing 7.735" long. 3- Deburr.								
110		0.00							
Brake NC	**Memo**	0.00							
Brake NC	Punch and form D2332-11 to lenght as per dwg D2332 using DT8012 (need 2 per ass'y)								

Dart Aerospace Ltd

W/O:		WORK ORDER CHANGES					
DATE	STEP	PROCEDURE CHANGE	By	Date	Qty	Approval Chief Eng / Prod Mgr	Approval QC Inspector

Part No: _____ **PAR #:** _____ **Fault Category:** _____ **NCR:** Yes No **DQA:** _____ **Date:** _____

Resolution: _____ **Disposition:** _____ **QA: N/C Closed:** _____ **Date:** _____

NCR:		WORK ORDER NON-CONFORMANCE (NCR)						
DATE	STEP	Description of NC Section A	Corrective Action Section B			Verification Section C	Approval Chief Eng	Approval QC Inspector
			Initial Chief Eng	Action Description Chief Eng	Sign & Date			

NOTE: Date & initial all entries

Work Order ID 73039

Wednesday, August 24, 2011 2:25:05 PM

Item ID: D2332-041 **Accept** **Setup Start** **Stop**

Revision ID:

Item Name: Lid Prop Assembly 6.69" long

Start Date: 8/24/2011 **Start Qty:** 10.00 **Cust Item ID:**

Required Date: 8/31/2011 **Req'd Qty:** 10.00 **Customer:**

Reference:

Run Start **Stop**

Approvals: **Process Plan:** _____ **Date:** _____ **Tooling:** _____ **Date:** _____

QC: _____ **Date:** _____ **SPC (Y/N):** _____ **Date:** _____

Sequence ID/ Work Center ID	Operation Description	Set Up/ Run Hours	Tool ID	Tool #	Plan Code	Accept Qty	Reject Qty	Reject Number	Insp. Stamp
120		0.00							
Small Fab	**Memo**	0.00							
Small Fab	1- Drill hole in D2332-11 as per dwg D2332 using drill jig DT8459 (drill one per ass'y) 2- Ensure no forein objects inside tube 3- Deburr								
130	QC5- Inspect part completeness to step on W/O	0.00	D2332-7 — δ u/08/29 (KW) D2332-5 — δ u/08/29 (KW) D2332-11 — δ u/08/29 (KW) D2332-13 — δ u/08/29 (KW)						
QC	**Memo**	0.00							
Quality Control									
140		0.00							
Large Fab	**Memo**	0.00							
Large Fab	Weld D2332-11 and D2332-5 as per dwg (weld 1 per ass'y) *******ensure nothing is inside of tube before welding******** S.S Rod batch: M114649								

11/08/29 (10)

11.08.31 / CMB 11/08/31

Dart Aerospace Ltd

W/O:		WORK ORDER CHANGES					
DATE	STEP	PROCEDURE CHANGE	By	Date	Qty	Approval Chief Eng / Prod Mgr	Approval QC Inspector

Part No: _____ **PAR #:** _____ **Fault Category:** _____ **NCR:** Yes No **DQA:** _____ **Date:** _____

Resolution: _____ **Disposition:** _____ **QA: N/C Closed:** _____ **Date:** _____

NCR:		WORK ORDER NON-CONFORMANCE (NCR)						
DATE	STEP	Description of NC Section A	Corrective Action Section B			Verification Section C	Approval Chief Eng	Approval QC Inspector
			Initial Chief Eng	Action Description Chief Eng	Sign & Date			

NOTE: Date & initial all entries

H:\fFORMS\Quality Assurance\approved QA\NCRWO RevE

Work Order ID 73039

Wednesday, August 24, 2011 2:25:05 PM

Item ID: D2332-041 **Accept** **Setup Start**

Revision ID: **Stop**

Item Name: Lid Prop Assembly 6.69" long

Start Date: 8/24/2011 **Start Qty:** 10.00 **Cust Item ID:**

Required Date: 8/31/2011 **Req'd Qty:** 10.00 **Customer:**

Reference:

Run Start

Approvals: **Process Plan:** _____ **Date:** _____ **Tooling:** _____ **Date:** _____

Stop

QC: _____ **Date:** _____ **SPC (Y/N):** _____ **Date:** _____

Sequence ID/ Work Center ID	Operation Description	Set Up/ Run Hours	Tool ID	Tool #	Plan Code	Accept Qty	Reject Qty	Reject Number	Insp. Stamp
150	QC9- Inspect visual per QSI004- Fusion Welds	0.00				Pl 11.08.31			
QC	**Memo**	0.00							
Quality Control									
160	QC5- Inspect part completeness to step on W/O	0.00				(10)			
QC	**Memo**	0.00							
Quality Control									
170		0.00				IB 11-9-7	(10)		
Small Fab	**Memo**	0.00							
Small Fab	1- Tumble					11/09/07	(10)		
	2- Assemble as per dwg D2332								

Dart Aerospace Ltd

W/O:		WORK ORDER CHANGES					
DATE	STEP	PROCEDURE CHANGE	By	Date	Qty	Approval Chief Eng / Prod Mgr	Approval QC Inspector

Part No: _____ **PAR #:** _____ **Fault Category:** _____ **NCR:** Yes No **DQA:** _____ **Date:** _____

Resolution: _____ **Disposition:** _____ **QA: N/C Closed:** _____ **Date:** _____

NCR:		WORK ORDER NON-CONFORMANCE (NCR)						
DATE	STEP	Description of NC Section A	Corrective Action Section B			Verification Section C	Approval Chief Eng	Approval QC Inspector
			Initial Chief Eng	Action Description Chief Eng	Sign & Date			

NOTE: Date & initial all entries

H:\fFORMS\Quality Assurance\approved QA\NCRWO RevE

Work Order ID 73039

Wednesday, August 24, 2011 2:25:05 PM

Item ID: D2332-041 **Accept** **Setup Start** **Stop**

Revision ID:

Item Name: Lid Prop Assembly 6.69" long

Start Date: 8/24/2011 **Start Qty:** 10.00 **Cust Item ID:**

Required Date: 8/31/2011 **Req'd Qty:** 10.00 **Customer:**

Reference:

Run Start **Stop**

Approvals: **Process Plan:** _____ **Date:** _____ **Tooling:** _____ **Date:** _____

QC: _____ **Date:** _____ **SPC (Y/N):** _____ **Date:** _____

Sequence ID/ Work Center ID	Operation Description	Set Up/ Run Hours	Tool ID	Tool #	Plan Code	Accept Qty	Reject Qty	Reject Number	Insp. Stamp
180	QC5- Inspect part completeness to step on W/O	0.00							
QC	Memo	0.00							
Quality Control									
190	Identify as per dwg & Stock Location: ST 512.	0.00							
Packaging	Memo	0.00							
Packaging									
200	QC21- Final Inspection - Work Order Release	0.00							
QC	Memo	0.00							
Quality Control									

8 4/09/07

(10) SP 11-09-07

11/9/8

MF 11-09-08

Dart Aerospace Ltd

W/O:		WORK ORDER CHANGES					
DATE	STEP	PROCEDURE CHANGE	By	Date	Qty	Approval Chief Eng / Prod Mgr	Approval QC Inspector

Part No: _____ **PAR #:** _____ **Fault Category:** _____ **NCR:** Yes No **DQA:** _____ **Date:** _____

Resolution: _____ **Disposition:** _____ **QA: N/C Closed:** _____ **Date:** _____

NCR:		WORK ORDER NON-CONFORMANCE (NCR)						
DATE	STEP	Description of NC Section A	Corrective Action Section B			Verification Section C	Approval Chief Eng	Approval QC Inspector
			Initial Chief Eng	Action Description Chief Eng	Sign & Date			

NOTE: Date & initial all entries

H:\fFORMS\Quality Assurance\approved QA\NCRWO RevE

Picklist Print

Wednesday, August 24, 2011 2:25:10 PM

Work Order ID: 73039

Parent Item: D2332-041

Parent Item Name: Lid Prop Assembly 6.69" long

Start Date: 8/24/2011 **Required Date:** 8/31/2011

Start Qty: 10.00 **Required Qty:** 10.00

Comments: IPP: B□02.08.12□Re-format; Incorporated D2332-13/-11/-7/-5□KJ/RF□
IPP Rev:C 08-06-02 add comment DD verified by:EC

Component Item ID/ Item Name	Replacement Item ID	Mfg/ Purch	Bin Item	Primary Location	Last Location	Route Seq ID	Unit of Measure	Qty on Hand	Qty per Kit	Total Qty	Qty Issued	Date Issued	Status
M304R.250 304 SS Round bar .250		Purchased	No			100	f	10.0427	0.1	1.052632	11/08/29		
				Location		**Loc Qty**		**Loc Code**					
				MAT028		10.042736							
					114482	10.042736				1.052632			
M304TR1.000W.049 304 RD Tube 1.00 x .049W		Purchased	No			100	f	28.1337	0.43	4.526316	11/08/29		
				Location		**Loc Qty**		**Loc Code**					
				MAT018		28.133684							
					111457	12.66							
					117598	15.473684				4.526316			
M304TR0.500W.035 304 RD Tube .500 x .035W		Purchased	No			110	f	62.3165	1.25	13.15789	11/08/29		
				Location		**Loc Qty**		**Loc Code**					
				MAT017		62.316478							
					115535	2.33							
					116720	1.66068							
					117598	58.325798				13.15789			

Dart Aerospace Ltd

W/O:		WORK ORDER CHANGES					
DATE	STEP	PROCEDURE CHANGE	By	Date	Qty	Approval Chief Eng / Prod Mgr	Approval QC Inspector

Part No: _____ **PAR #:** _____ **Fault Category:** _____ **NCR:** Yes No **DQA:** _____ **Date:** _____

Resolution: _____ **Disposition:** _____ **QA: N/C Closed:** _____ **Date:** _____

NCR:		WORK ORDER NON-CONFORMANCE (NCR)						
DATE	STEP	Description of NC Section A	Corrective Action Section B			Verification Section C	Approval Chief Eng	Approval QC Inspector
			Initial Chief Eng	Action Description Chief Eng	Sign & Date			

NOTE: Date & initial all entries

H:\fFORMS\Quality Assurance\approved QA\NCRWO RevE

Picklist Print

Wednesday, August 24, 2011 2:25:11 PM

Work Order ID: 73039

Parent Item: D2332-041

Parent Item Name: Lid Prop Assembly 6.69" long

Start Date: 8/24/2011 **Required Date:** 8/31/2011

Start Qty: 10.00 **Required Qty:** 10.00

AN4-4A		Purchased	No	170	Each	70.0000	1	10	11/09/07
Bolt									

Location		Loc Qty	Loc Code	
FP-B		24		
	114615	24		
ST356		46		
	114615	46		10

AN960JD416L	NAS1149D0416J	Purchased	No	170	Each	19.0000	3	30	11/09/07
Washer									

4D M116513

30x

Location		Loc Qty	Loc Code	
FP-B		17		
	110153	17		
ST298		2		
	110153	2		

MS21042L4		Purchased	No	170	Each	4,359.000	1	10	11/09/07
Nut									

Location		Loc Qty	Loc Code	
ST300		4359		
	117441	214		
	117601	645		
	117885	1500		10
	118451	2000		

Dart Aerospace Ltd

W/O:		WORK ORDER CHANGES					
DATE	STEP	PROCEDURE CHANGE	By	Date	Qty	Approval Chief Eng / Prod Mgr	Approval QC Inspector

Part No: _____ **PAR #:** _____ **Fault Category:** _____ **NCR:** Yes No **DQA:** _____ **Date:** _____

Resolution: _____ **Disposition:** _____ **QA: N/C Closed:** _____ **Date:** _____

NCR:		WORK ORDER NON-CONFORMANCE (NCR)						
DATE	STEP	Description of NC Section A	Corrective Action Section B			Verification Section C	Approval Chief Eng	Approval QC Inspector
			Initial Chief Eng	Action Description Chief Eng	Sign & Date			

NOTE: Date & initial all entries

H:\fFORMS\Quality Assurance\approved QA\NCRWO RevE

DESIGN	DRAWN BY	DART AEROSPACE LTD HAWKESBURY, ONTARIO, CANADA	
CHECKED	APPROVED	DRAWING NO. D2332	REV. C SHEET 1 OF 2
DATE 03.07.03		TITLE LOD PROP ASSEMBLY	SCALE NTS

A	94.12.16	NEW ISSUE
B	97.09.30	CHANGE 416 WASHERS TO 416L
C	03.07.03	MAKE -041 PROP 6.69" LONG (STD) MAKE -043 PROP 8.00" LONG (OPT.)
C1	03.08.06	ADD -045 PROP (7.25" LONG)

RELEASED 03.07.04

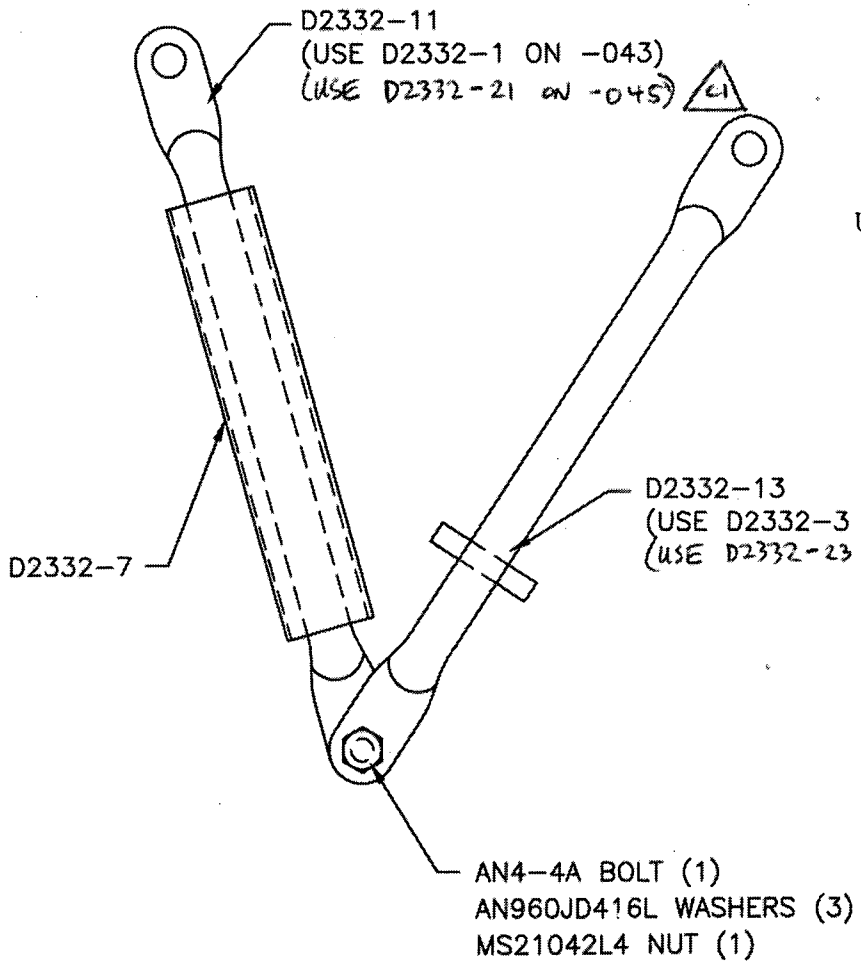

SHOP COPY
RETURN TO
ENGINEERING
UNCONTROLLED COPY
SUBJECT TO AMENDMENT
WITHOUT NOTICE
WORK ORDER
NO. 73039

11-08-04

D2332-041 SHOWN
(D2332-043 SIMILAR)
(D2332-045 SIMILAR) C1

Copyright © 1994 by DART AEROSPACE LTD
THIS DOCUMENT IS PRIVATE AND CONFIDENTIAL AND IS SUPPLIED ON THE EXPRESS CONDITION THAT IT IS NOT TO BE USED FOR ANY PURPOSE OR COPIED OR COMMUNICATED TO ANY OTHER PERSON WITHOUT WRITTEN PERMISSION FROM DART AEROSPACE LTD.

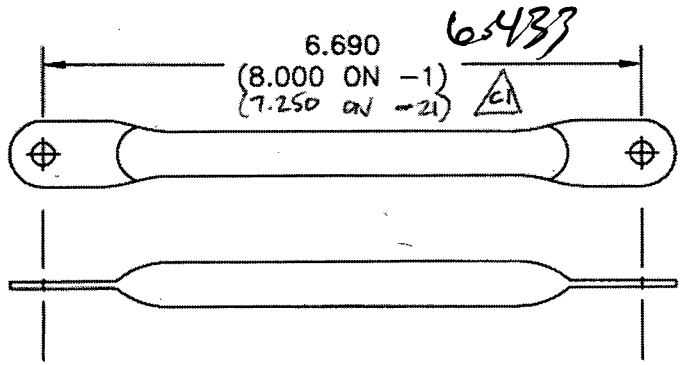

D2332-11 PROP
(D2332-1 SIMILAR)

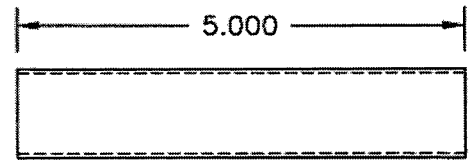

D2332-7 LOCKING COLLAR

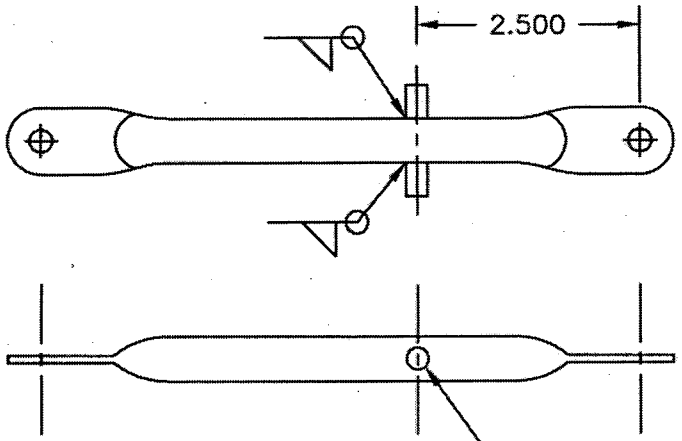

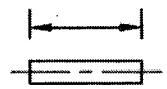

D2332-5 STOP PIN

DRILL 1/4 HOLE FOR D2332-5

D2332-13
M/F D2332-11 & D2332-5
(D2332-3 SIMILAR - M/F D2332-1 & D2332-5)
(D2332-23 SIMILAR - M/F D2332-21 & D2332-5) C1

NOTES:
1. MATERIAL: 0.5 OD x 0.035 WALL SS TUBE (D2332-1/-11) M304TR0.500W.035
0.25 OD SS ROD 1.25 LONG (D2332-5) M303R0.250
1.0 OD x 0.049 WALL SS TUBE (D2332-7) M304TR1.000W.049
2. TUBE ENDS ARE CENTER-CENTER FOR D2332-1/-3 & D2332-11/-13

C1	03.08.06	ADD -045 PROP (7.25" LONG)
C	03.07.03	MAKE -041 PROP 6.69" LONG (4TD) MAKE -043 PROP 8.00" LONG (OFT)

DESIGN | DRAWN BY | CHECKED | APPROVED | DATE 03.07.03

DART AEROSPACE LTD
HAWKESBURY, ONTARIO, CANADA

DRAWING NO. D2332 | REV. C | SHEET 2 OF 2

TITLE LID PROP ASSEMBLY | SCALE 1:2

DART

QA COPY ISSUED

RELEASED 03.07.04

73039

65433

Copyright © 1994 by DART AEROSPACE LTD
THIS DOCUMENT IS PRIVATE AND CONFIDENTIAL AND IS SUPPLIED ON THE EXPRESS CONDITION THAT IT IS NOT TO BE USED FOR ANY PURPOSE OR COPIED OR COMMUNICATED TO ANY OTHER PERSON WITHOUT WRITTEN PERMISSION FROM DART AEROSPACE LTD.